96633309 Voyager Blade 2 MS90° WH
Instruction Manual of Bracket Mounting Part

THORN

1

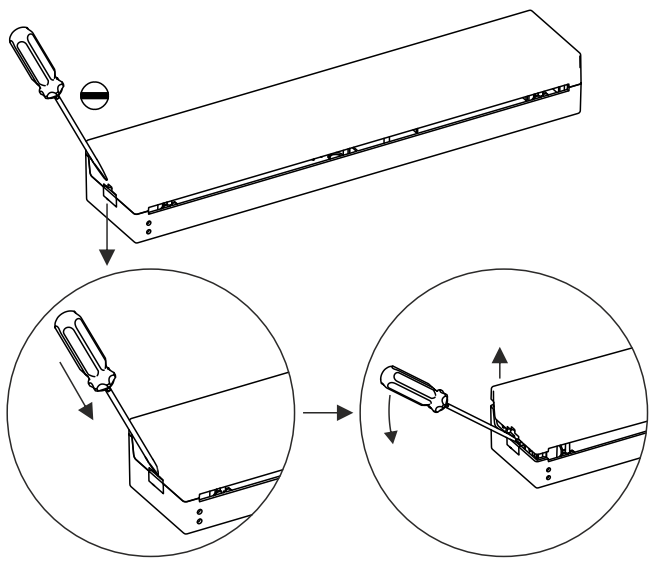

2

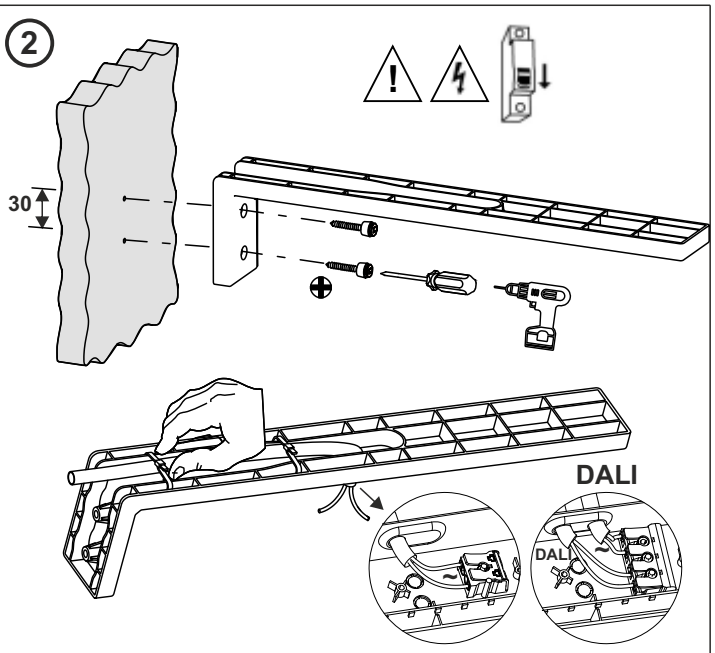

3

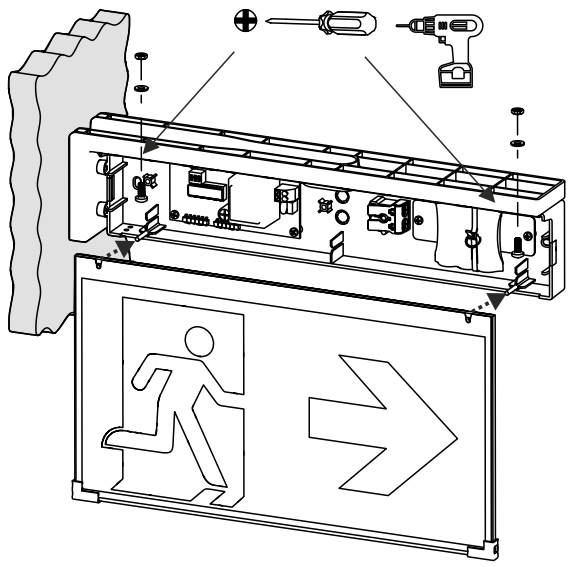

4

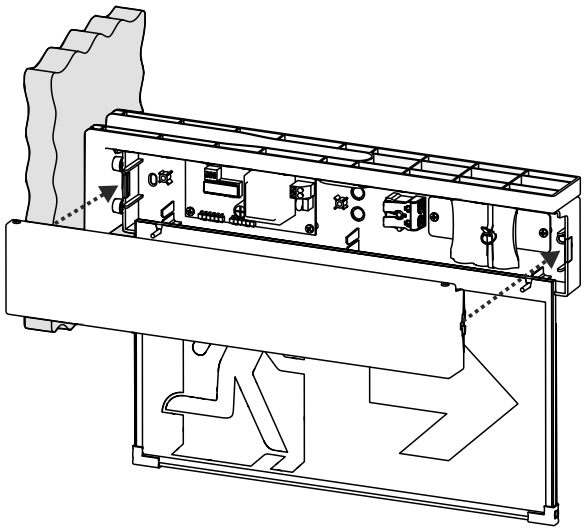

5

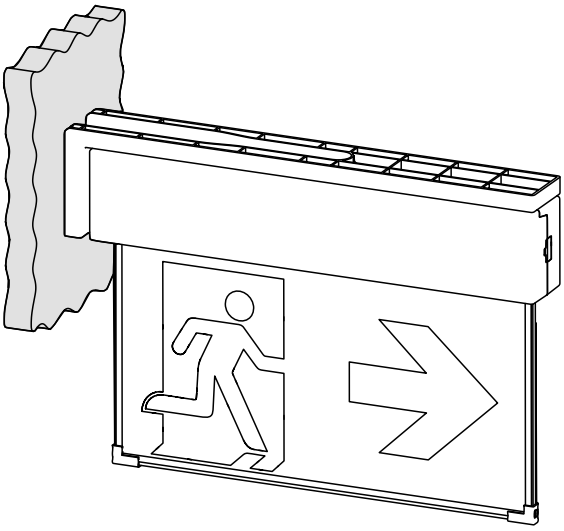

6

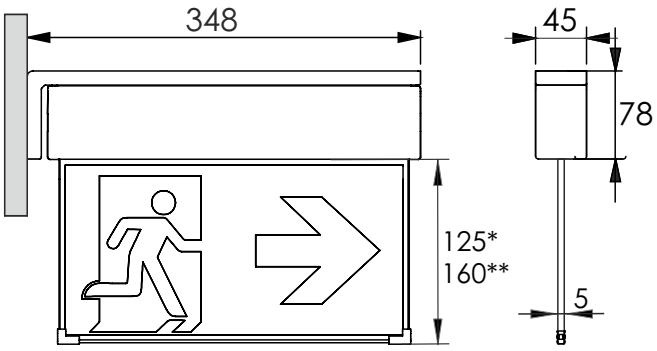

* Voyager Blade 2 115 MS ...
** Voyager Blade 2 150 MS ...